MILLLED CENTERLINE RUMBLE STRIPS

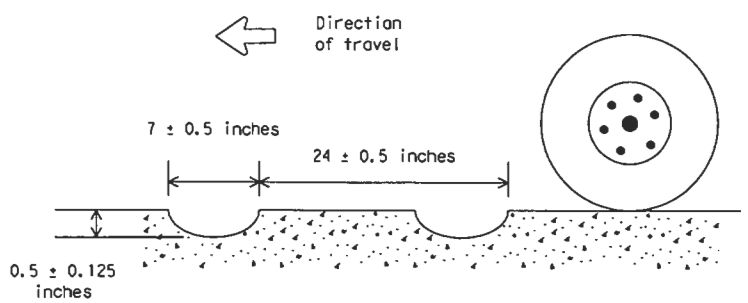

PROFILE VIEW

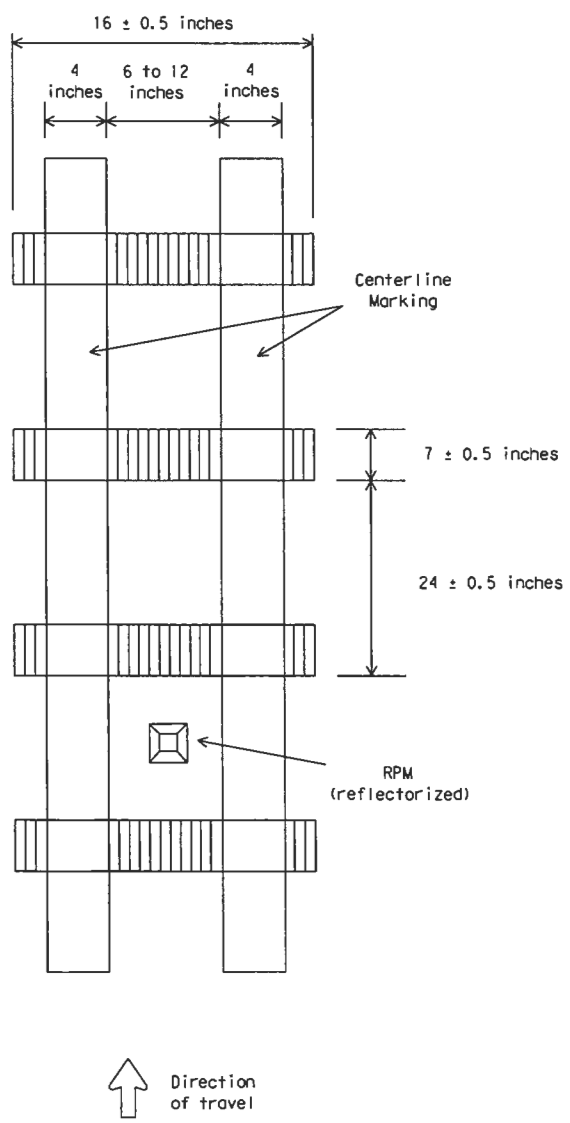

PLAN VIEW

RAISED CENTERLINE RUMBLE STRIPS

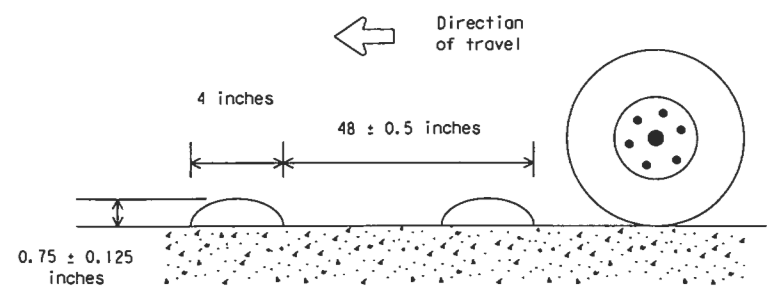

PROFILE VIEW

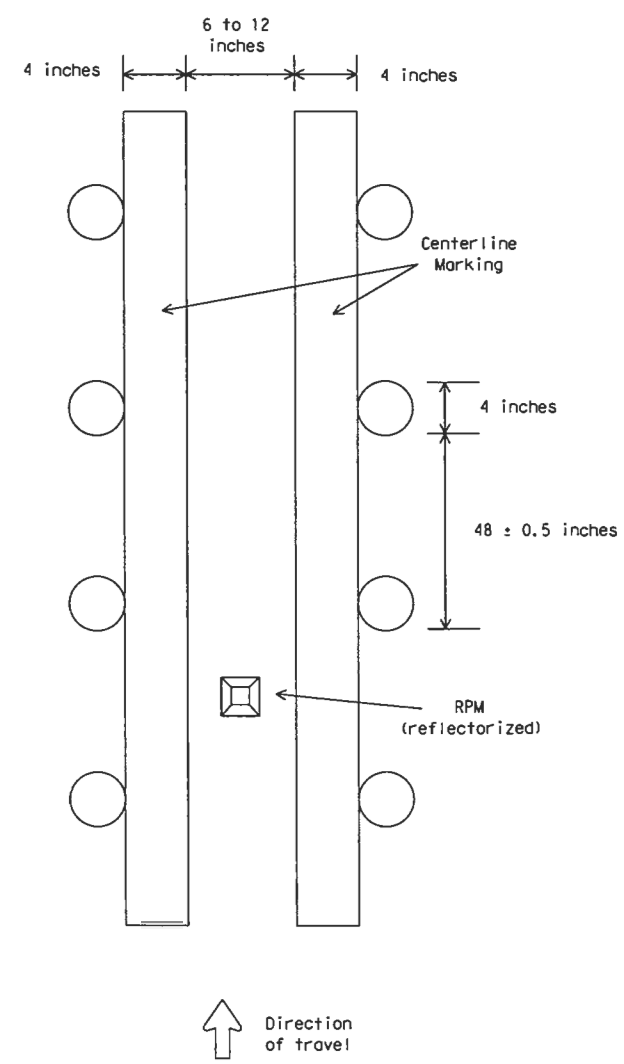

PLAN VIEW

GENERAL NOTES:

1. Centerline rumble strips are primarily intended to alert drivers that they are in the process of or have left their original lane of travel. These types of rumble strips are intended to give a vibratory and auditory warning.
2. Centerline rumble strips are not designed to physically decrease the speed of a vehicle.
3. Rumble strips should be considered along roadways with high incidents related to unintentional lane departures as the result of inattentive drivers or impaired visibility of positive guidance pavement markings from adverse weather. Rumble strips should only be installed after all traditional warning devices such as pavement markings and warning signs have proven ineffective based on a field study.
4. Milled rumble strips are preferred. Rolled rumble strips, asphalt overlays, asphalt strips, and built-up thermo-plastic are not recommended due to the inconsistent vibratory and auditory effects and wear.
5. Raised rumble strips consisting of non-reflective raised pavement buttons may be used. Raised rumble strips can be affixed to asphalt or concrete with bituminous or adhesives, as per the manufacturer's recommendations. If pavement thickness is less than 2 inches, milled rumble strips shall not be used.
6. Raised non-reflective traffic buttons shall be placed adjacent to the pavement marking delineating the edgeline when used as a rumble strip. The color of the button should match the color of the adjacent edgeline marking, however, the color of the button may be gray or black. The button will be paid for under Item 672, "Raised Pavement Markers."
7. All milled rumble strips shall be cut to a minimum of 1/2 inch depth, 7 inches length, and 16 inches width for centerline. The dimensions of non-reflective, raised pavement buttons for use as raised rumble strips shall be a minimum of 4 inches in length and width, and 3/4 inch in height prior to adhering to the pavement surface.
8. The spacing shall be measured from leading edge to leading edge or an-centers of adjacent rumble strips. The spacing requirements shall be 24 (milled centerline rumble strips), and 48 inches (raised centerline rumble strips).
9. Rumble strips shall not be milled or depressed into bridge decks or into pavement with less than 2 inches of thickness.
10. Pavement markings must be applied over milled centerline rumble strips. Raised pavement buttons shall be placed directly adjacent to the pavement marking delineating either the centerline or the edgeline when used as a raised rumble strip.
11. Consideration should be given to noise levels when centerline and edgeline rumble strips are installed near residential areas, schools, churches, etc. A minimum of 3/8 inch depth of milled rumble strip may be considered in these areas.

DISCLAIMER
The use of this standard is governed by the "Texas Engineering Practice Act". No warranty of any kind is made by TxDOT for any purpose whatsoever. TxDOT assumes no responsibility for the conversion of this standard to other formats or for incorrect results or damages resulting from its use.

LEVELS DISPLAYED:
ACC:

STANDARD PLANS
Texas Department of Transportation
Traffic Operations Division

PRELIMINARY COPY SUBJECT TO REVISION

CENTERLINE RUMBLE STRIPS

RS(3)-06

©TxDOT Date		DN: - BAS	CK:	DW: - FDN	CK: - CAL
REVISIONS	STATE DISTRICT	FEDERAL REGION	FEDERAL AID PROJECT		SHEET
		6			
	COUNTY		CONTROL	SECTION	JOB	HIGHWAY

XXX